Dosimetry for ocular proton beam therapy at the Harvard Cyclotron Laboratory based on the ICRU Report 59

W. D. Newhauser[a)]
Massachusetts General Hospital, 55 Fruit Street, NPT-100, Boston, Massachusetts 02114

J. Burns[b)]
Harvard Cyclotron Laboratory, 44 Oxford Street, Cambridge, Massachusetts 02138

A. R. Smith
Massachusetts General Hospital, 55 Fruit Street, NPT-100, Boston, Massachusetts 02114

(Received 16 October 2001; accepted for publication 8 April 2002; published 8 August 2002)

The Massachusetts General Hospital, the Harvard Cyclotron Laboratory (HCL), and the Massachusetts Eye and Ear Infirmary have treated almost 3000 patients with ocular disease using high-energy external-beam proton radiation therapy since 1975. The absorbed dose standard for ocular proton therapy beams at HCL was based on a fluence measurement with a Faraday cup (FC). A majority of proton therapy centers worldwide, however, use an absorbed dose standard that is based on an ionization chamber (IC) technique. The ion chamber calibration is deduced from a measurement in a reference ^{60}Co photon field together with a calculated correction factor that takes into account differences in a chamber's response in ^{60}Co and proton fields. In this work, we implemented an ionization chamber-based absolute dosimetry system for the HCL ocular beamline based on the recommendations given in Report 59 by the International Commission on Radiation Units and Measurements. Comparative measurements revealed that the FC system yields an absorbed dose to water value that is 1.1% higher than was obtained with the IC system. That difference is small compared with the experimental uncertainties and is clinically insignificant. In June of 1998, we adopted the IC-based method as our standard practice for the ocular beam. © *2002 American Association of Physicists in Medicine.* [DOI: 10.1118/1.1487425]

Key words: ocular proton beam dosimetry

I. INTRODUCTION

Melanoma of the uveal tract is the most common primary intraocular malignancy and the only potentially fatal intraocular tumor in the adult. Stallard[1] demonstrated in 1966 that uveal melanomas could be successfully treated with radiation therapy, with preservation of the eye in almost two-thirds of surviving patients. These findings spurred further advances in ocular radiation therapy, which has come to replace enucleation (surgical removal of the eye) as the standard treatment. The two major types of radiation therapy are radioactive plaques, which are sutured on the sclera over the area of the tumor, and external beam irradiation using charged particles such as protons and helium ions. Both treatment modalities control the tumor progression and allow retention of the eye in a majority of cases. Contemporary studies aim to reduce treatment-related side effects (cf. Refs. 2–5), principally vision loss, and to avoid the need for enucleation by maximizing tumor control rates.

Constable and Koehler recognized that proton beams are well suited for treating intraocular neoplasms: relatively large radiation doses can be concentrated in the tumor, and uninvolved intraocular and orbital structures can largely be spared.[6] In 1975, a dedicated proton beamline was installed for ocular treatments at the Harvard Cyclotron Laboratory (HCL). Between 1975 and 2002, 2973 ocular patients were treated at HCL in a collaborative effort that included the Massachusetts General Hospital (MGH) and the Massachusetts Eye and Ear Infirmary.[3,4,7–9] The patient outcomes with heavy particle beam therapy appear to be superior compared to those achieved with ^{125}I or ^{106}Ru plaques (cf. Refs. 10 and 11). Proton beams have also been used to treat other ocular tumors, including: angioma, hemangioma, carcinoid, lymphoma, conjunctival melanoma, metastatic lesions, and pediatric retinoblastoma[12] (the most common childhood intraocular malignancy). In addition, studies are under way at HCL and elsewhere for the treatment of age-related macular degeneration (cf. Refs. 13–16), the leading cause of blindness in adults living in developed countries. By the end of 1999, 10 829 eye patients had been treated with protons worldwide.[17] Presently, 13 centers treat ocular or orbital diseases with proton beams.

The proliferation of ocular proton therapy has necessitated the standardization of clinical dosimetry. This need was underscored by previous investigations (cf. Refs. 18–24) that revealed the HCL absorbed dose determinations were approximately 7% lower than the mean value from other institutions. This discrepancy is related to the fact that, traditionally, the HCL measured absorbed dose with a diode[25] calibrated against a Faraday cup (FC),[26,27] while the majority of other proton therapy institutions employ ionization-chamber methods. The first formal standardization effort led to the publication of dosimetry protocol by the American Association of Physicists in Medicine.[28] Subsequently, protocols have been published by the European Clinical Heavy Particle Dosimetry Group,[29] the International Commission

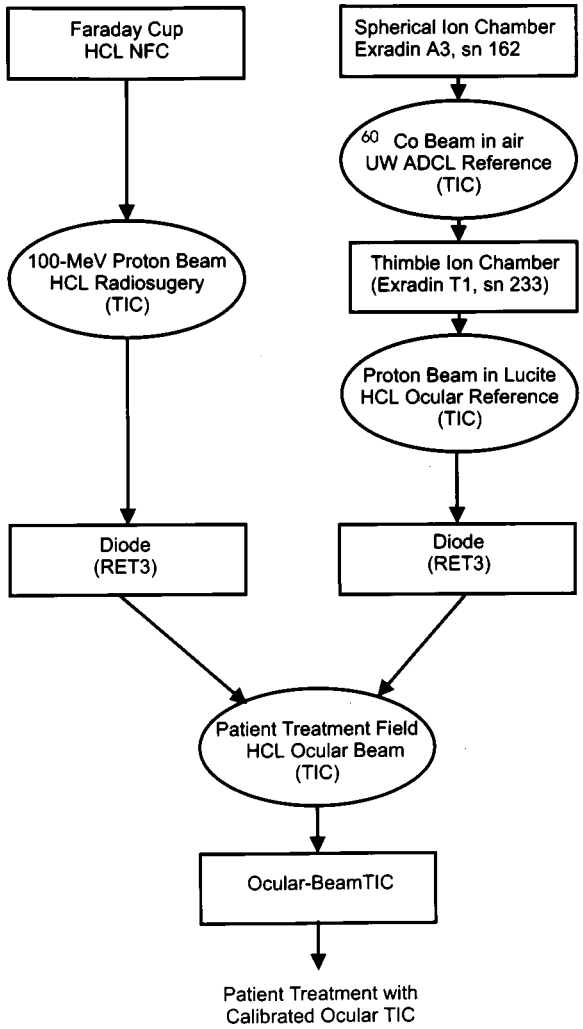

FIG. 1. Schematic diagram showing the calibration schemes for the Harvard Cyclotron Laboratory Faraday cup (HCL/FC) standard (left branch) and for the International Commission on Radiation Measurements and Units (ICRU) ionization chamber (ICRU/IC) standard (right branch). The boxes identify various dosimeters. The ovals describe the calibration or reference beams, where the transfer instruments are various transmission ionization chambers (TIC).

on Radiation Units and Measurements (ICRU),[30] and the International Atomic Energy Agency.[31]

This work aims to quantify any systematic differences in the absolute dosimetry of the ocular beam at HCL. Specifically, we compare the absorbed dose determined from a diode (calibrated with the HCL Faraday cup system) with an ionization chamber (calibrated according to the ICRU Report 59), as illustrated in Fig. 1.

II. METHODS AND MATERIALS

A. Ocular-beamline properties and reference field

All measurements were performed in the ocular treatment beamline of the Harvard Cyclotron Laboratory, shown schematically in Fig. 2, which accepts a nearly monoenergetic 159 MeV proton pencil beam. The beam is incident on a polymethyl methacrylate (commonly called Lucite, $C_5H_8O_3$, $\rho \approx 1.2$ g/cm^3, I.E. Dupont de Nemours and Company Corporation, 101 West 10th St. Wilmington, DE) range modulator wheel, a brass collimator, an adjustable thickness polycarbonate (commonly called Lexan, $C_{16}H_{14}O_3$, $\rho = 1.2$ g/cm^3, General Electric Company Corporation, 1 Plastics Ave, Pittsfield, MA) degrader, a fixed thickness Lexan degrader, a pair of ionization chamber monitors, a brass snout, and a final beam-shaping brass aperture. The fixed degrader (113 mm thick) reduces the proton beam range to 40 mm, and spreads the beam laterally to a clinically useful size. The variable degrader allows the penetration depths to be varied continuously from 0 to 40 mm.

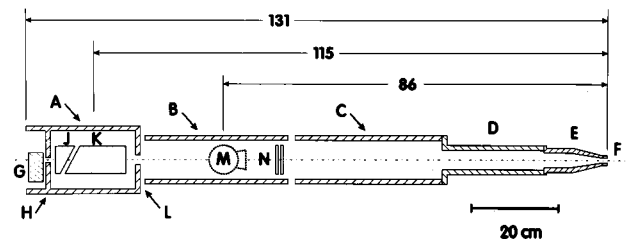

FIG. 2. Schematic diagram of the ocular nozzle at the Harvard Cyclotron Laboratory. The nozzle comprises four brass cylindrical sections (A–D), a tapered brass snout (E), and a field defining aperture (F). Section (A) contains a rotating range-modulator wheel (G), a collimator (H), an adjustable range shifter (J), a fixed range shifter (K), and a collimator (L). Section (B) contains a diagnostic x-ray tube for patient setup, which is removed to accommodate beam monitor chambers (N) during proton beam delivery. Sections (C) and (D) contain only air. The surface of the patient (not shown) is positioned 57 mm from the final aperture (F). The radiographic image plane (not shown) is located 39 cm beyond the final aperture. The distance from the effective proton source to the surface of the patient is 123 cm.

In selecting a reference dosimetry beam, two considerations predominate. First, the beam should be representative of typical treatment beams, e.g., nozzle configurations and beam quality. This helps to ensure that the measurements are relevant to the patient treatments. Second, the reference dosimetry location should be in a low dose-gradient region in order to minimize the influence of small positioning errors. For the ocular beamline, these requirements were met with a spread-out Bragg peak (SOBP) with a penetration of 40 mm depth to the distal 90%, as plotted in Fig. 3, with an adjustable range shifter setting of zero thickness. Figure 4 plots a vertical cross-field dose profile that intersects the central axis at 20 mm depth. The final collimating aperture, 24 mm inside diameter, limits the field diameter to 25 mm at isocenter, as measured from the 90%-to-90% points in the cross-field dose profile. The reference dosimetry location lies on the beam central axis at 20 mm water equivalent depth and is denoted by z_m. (In this work, we follow the definition of water equivalent depth, as well as methods for its determination, from the ICRU.[30] Essentially, the range of a particle or beam of a certain energy in some medium is scaled to give the range in water at that same energy. The difference in proton fluence reduction in water relative to the other medium is not taken into account in this scaling procedure.) Yan *et al.*[32] measured the neutron dose equivalent per proton absorbed dose in the HCL eye beam at 3×10^{-5} Sv/Gy at 25 cm distance from the location of the eye during treatment. This very low value suggests that, for the purposes of reference

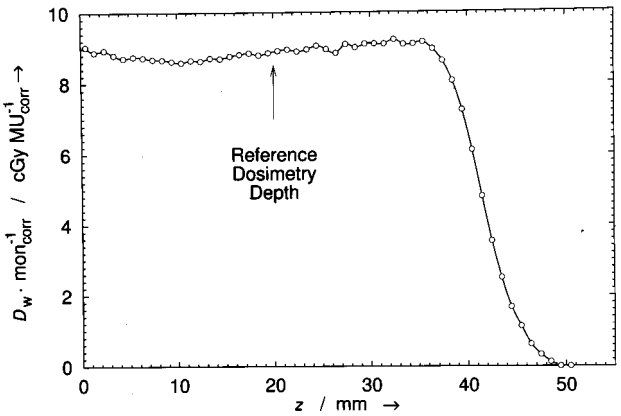

FIG. 3. Absorbed dose to water per monitor unit, $D_w/\mathrm{mon}_{\mathrm{corr}}$, as a function of water depth, z, measured with a diode. The points represent measurements and the solid line, a spline-interpolation, is an eye guide. The reference dosimetry depth, 20 mm upstream of the depth at which the dose falls to 90% of its peak value, is representative of actual ocular treatment techniques.

proton dosimetry, no correction is required for the neutron component in the HCL ocular treatment field.

Although the observed neutron exposures are small in the HCL eye beam, that result depends on the particular features of the beamline and treatment apparatus. Therefore, we must emphasize the need for each facility to verify that its neutron exposures to patients are as low as reasonably achievable in order to minimize the probability of complications, e.g., inducing second tumors. This concern is particularly pronounced in cases where the vast majority of protons entering the nozzle (>95% in this case) do not reach the patient but are lost within the nozzle itself. These protons have no therapeutic value but may lead to significant levels of neutron production. In the HCL ocular nozzle, these proton losses are principally attributable to inefficiencies in the beam scattering system (the fixed range shifter) and due to losses in the final, field-defining aperture.

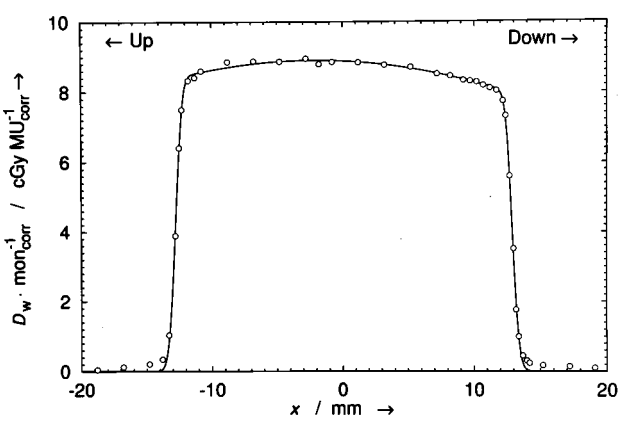

FIG. 4. Measured absorbed dose per monitor unit, $D_w/\mathrm{mon}_{\mathrm{corr}}$, vs lateral position, x, with respect to the beam axis at a 20 mm depth, near the center of the spread-out Bragg peak. The measured values (open circles) were made with a silicon diode (RET3). The solid line, which served as an eye guide, is a model fit to the measured values.

A proton beam irradiation is terminated automatically by shutting off the electrical current to the cyclotron's ion source when the preset irradiation amount, in monitor units, has been reached. The absorbed dose during treatment is continuously monitored with a pair of thin, air-filled transmission ionization chambers (TICs) that follow the ambient atmospheric pressure. The TICs have a circular cross-sectional area of 50.8 mm diameter, an interelectrode gap of 3.18 mm, with a 1500 V collecting voltage applied between each electrode pair.

B. Absorbed dose measurements with an ionization chamber

The quantity absorbed dose is defined as[30]

$$D = \mathrm{d}\varepsilon/\mathrm{d}m, \tag{1}$$

where $\mathrm{d}\varepsilon$ is the mean energy imparted by ionizing radiation to matter of mass $\mathrm{d}m$. The absorbed dose to the gas cavity of an ionization chamber, D_{g}, per unit charge produced in the cavity, Q, is

$$D_{\mathrm{g}}/Q = W/m_{\mathrm{g}}, \tag{2}$$

where W is the mean energy required to create an ion pair and m_{g} is the sensitive gas mass in the cavity. For proton beams, W varies only slightly over the interval of clinically relevant proton energy. The ICRU[30] recommends that W should be approximated by a constant value of $W_{\mathrm{p}} = 34.8$ J/C over the proton energy range of relevance to clinical dosimetry ($E_{\mathrm{p}} < 250$ MeV). The cavity gas mass is determined experimentally in ^{60}Co radiation. The absorbed dose in the gas is converted to absorbed dose in the material of interest, e.g., water for reference dosimetry, with Bragg–Gray cavity theory. For the reader's convenience, we briefly present the calibration formalism in the notation of the ICRU Report 59.[30]

The air-kerma formalism provides the absorbed dose to water from protons with

$$D_{\mathrm{w,p}} = M_{\mathrm{p}}^{\mathrm{corr}} N_{D,\mathrm{g}} C_{\mathrm{p}}, \tag{3}$$

where $M_{\mathrm{p}}^{\mathrm{corr}}$ is the ionization charge (corrected for pressure and temperature effects, recombination, leakage, polarity effects, etc.), where

$$N_{D,\mathrm{g}} = N_K (1-g) A_{\mathrm{wall}} A_{\mathrm{ion}} / (s_{\mathrm{wall,g}})_{\mathrm{c}} (\mu_{\mathrm{en}}/\rho)_{\mathrm{air,wall}} K_{\mathrm{hum}} \tag{4}$$

and where

$$C_{\mathrm{p}} = (S_{\mathrm{w,air}})_{\mathrm{p}} (W_{\mathrm{air}})_{\mathrm{p}} / (W_{\mathrm{air}})_{\mathrm{c}}. \tag{5}$$

The air kerma calibration coefficient for ^{60}Co, denoted by N_K, was measured at a secondary standards laboratory[33] and is traceable to the United States National Institute for Standards and Technology (NIST). The fraction of secondary electron energy lost to bremsstrahlung, denoted by g, is from Ref. 34. A_{wall} corrects for absorption and scatter in the wall and buildup cap materials and A_{ion} corrects for ion recombination during the ^{60}Co calibration. The term $(s_{\mathrm{wall,g}})_{\mathrm{c}}$ is the mean ratio of restricted mass stopping powers of the wall material and the gas for the secondary electrons in the pho-

TABLE I. Parameters for the thimble ionization chamber (Exradin model T1, serial number 233). The calibration coefficient adopted is based on an experimental determination of the chamber's gas-mass in a reference proton beam.

Parameter	Value	Units	Ref.	Comments
A_{wall}	0.992	⋯	30	
$(s_{\mathrm{wall,air}})_{\mathrm{c}}$	1.145	⋯	30	
$(\mu_{\mathrm{en}}/\rho)_{\mathrm{air,wall}}$	0.906	⋯	30	
$\mathrm{K}_{\mathrm{hum}}$	0.997	⋯	30	For ^{60}Co radiation
g	0.003	⋯	34	
$N_{D,\mathrm{g}}/(N_K A_{\mathrm{ion}})$	0.9506	⋯	This work	From Eq. (4)
$(W_{\mathrm{air}})_{\mathrm{c}}$	33.77	J/C	30	Ambient (humid) air
$(s_{\mathrm{w,air}})_{\mathrm{p}}$	1.139	⋯	51	
$(W_{\mathrm{air}})_{\mathrm{p}}$	34.8	J/C	30	Ambient (humid) air
$(W_{\mathrm{air}})_{\mathrm{p}}/(W_{\mathrm{air}})_{\mathrm{c}}$	1.031	⋯	30	Ambient (humid) air
C_{p}	1.174	⋯	This work	
$N_{D,\mathrm{g}}C_{\mathrm{p}}/(N_K A_{\mathrm{ion}})$	1.116	⋯	This work	From Eqs. (4) and (5)
			Chamber-specific values	
N_K	6.763×10^{8}	Gy/C	UW ADCL (Ref. 33)	
A_{ion}	0.999	⋯	UW ADCL (Ref. 33)	
$N_{D,\mathrm{g}}$	6.461×10^{8}	Gy/C	Method of ICRU (Ref. 30)	From Eq. (4)
m_{g}	5.22×10^{-8}	kg	This work	At 22 °C, 101.3 kPa
$(k_{\mathrm{s}})_{\mathrm{p}}$	1.00	⋯	This work	Recombination correction in proton beam
$(k_{\mathrm{pol}})_{\mathrm{p}}$	1.00	⋯	This work	Polarity correction in proton beam

ton calibration beam. The term $(\mu_{\mathrm{en}}/\rho)_{\mathrm{air,wall}}$ is the mass energy-absorption coefficient ratio of air and wall for ^{60}Co radiation. The humidity correction, K_{hum}, corrects for the difference in response in ambient air compared to dry air. [Medin *et al.* (2000)[45] subsequently pointed out that K_{hum} should not appear in Eq. (4). This conceptual error is discussed in Sec. IV.] The term C_{p} converts the chamber's measured response in ^{60}Co radiation to that in a proton beam. The term $(s_{\mathrm{w,air}})_{\mathrm{p}}$ is the ratio of proton mass stopping powers in water and air and is approximated by a constant value of 1.139 for range and modulation functions used in ocular treatments at HCL. In fact, based on the simulations by Medin and Andreo,[51] this value of mass stopping power ratio is constant to within less than 0.1% over the water depth interval extending from 9 to 33 mm upstream of the mean range of a 150 MeV proton beam. $(W_{\mathrm{air}})_{\mathrm{p}}$ and $(W_{\mathrm{air}})_{\mathrm{c}}$ are the mean energies expended to form an ion pair in air for proton and ^{60}Co radiations, respectively. The values of the dosimetry parameters in Eqs. (2)–(5) are listed in Table I.

The thimble chamber (model T1, serial number 233, Exradin Inc., Lisle, IL) contains an air filled cavity, vented to the ambient atmosphere, with a nominal volume of 0.05 cm^3. Figure 5 illustrates the chamber's design, including a wall and a central electrode that are made of A-150 tissue-substitute plastic.[35] A special jig, shown in Fig. 6, precisely positions a Lucite phantom in the reference beam. The chamber resides in a hole in the phantom that places the center of the chamber's active volume on the beam's central axis, at 20 mm water equivalent depth, and with 57 mm distance between the aperture and the phantom surface. The alignment of the chamber with respect to the beam central axis was verified with radiographic images and/or with a light-field and shadow-template technique.

By solving Eq. (2) for m_{g}, the chamber's gas mass was estimated at 5.226×10^{-8} kg, where the value of absorbed dose per ionization charge produced D_{g}/Q was calculated with Eq. (4), yielding $D/Q=N_{D,\mathrm{g}}=6.461\times10^{8}$ Gy/C. The ionization charge collected was measured with a commercial electrometer (Keithley Instruments, Inc., model 6512, serial number 0603340, Cleveland, OH) that was calibrated traceable to the NIST. Measurements were made in order to estimate the influence on charge collection of bias polarity, voltage, and proton beam dose and dose rate. For the reference-dosimetry measurements considered here, the correction factors for these effects were negligibly small.

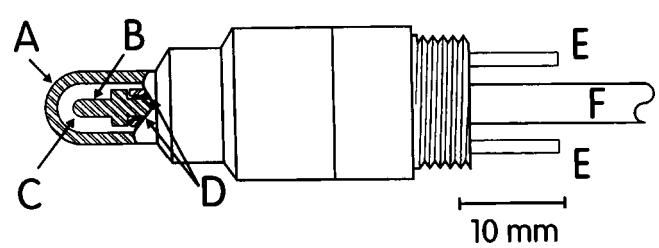

FIG. 5. A scale drawing of the thimble ionization chamber (model T1, Exradin Inc., Lisle, IL). The chamber wall (A) and central electrode (B) are made of A-150 tissue-substitute plastic. The air-filled chamber cavity (C) has a nominal active volume of 0.05 cm^3 and is vented with two flexible tubes (E). The chamber contains a guard ring (D) that is held at approximately the potential of the central electrode in order to minimize leakage current from the wall, which is held at ground. The chamber is connected to an electrometer and high-voltage power supply with a triax cable (F). Adapted from the manufacturer's drawing (Ref. 52).

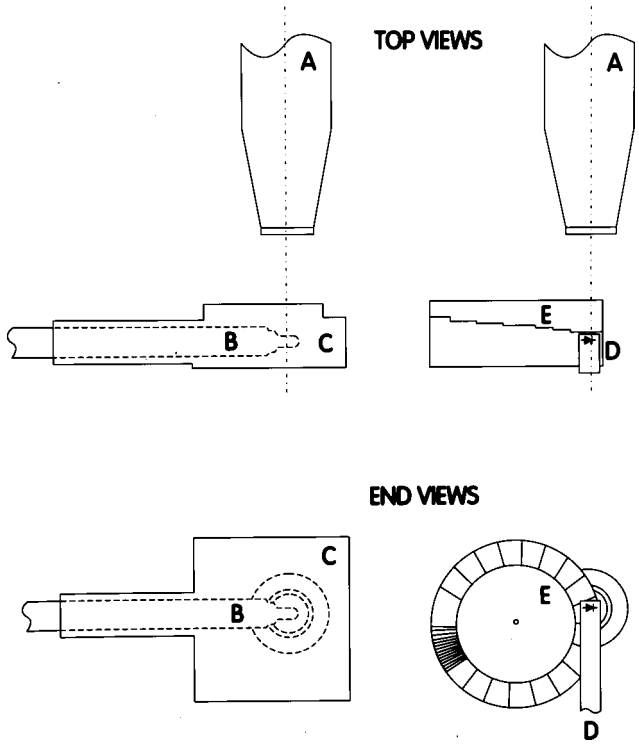

FIG. 6. Diagrams of the ionization chamber and diode dosimetry system mounted on the HCL ocular beamline. The beamline, as shown here, is configured for absolute dosimetry measurements including a tapered snout with a 24-mm-diameter aperture (A). The thimble ionization (B) chamber is mounted in a special holder (C) shown in plan view (upper left) and looking along the beam axis toward the proton source (lower left). The diode dosimeter (D) is mounted on a spring-loaded pivoting arm located behind a variable-thickness stepped wheel (E). Both systems position their respective dosimeters at the center of the spread-out Bragg peak in depth and at the center of the field's cross-sectional area in the transverse direction.

C. Absorbed dose measurements with a diode

The small silicon diode (designated as RET3) was calibrated against a Faraday cup (FC) and has provided absorbed dose measurements for ocular therapy dosimetry since 1995. The Faraday cup method essentially measures the proton fluence, ϕ, which is subsequently converted to absorbed dose by multiplying by the mean proton mass stopping power for tissue, $(\mathrm{d}E/\rho\,\mathrm{d}x)_{\mathrm{tiss,avg}}$ or

$$D=\phi(\mathrm{d}E/\rho\,\mathrm{d}x)_{\mathrm{tiss,avg}}, \tag{6}$$

where

$$\phi=N/A. \tag{7}$$

The proton fluence at the measurement position, nominally monoenergetic with some small amount of contamination by lower-energy protons and other particles, had a mean proton energy of 126 MeV. The FC-based fluence determination and the subsequent diode calibration measurement were carried out under the same beam conditions and at the same location. In Eq. (7), N is the number of protons and A is the effective cross-sectional area of the beam (1.89 cm^2) at the measurement location. The number of protons is deduced from a charge measurement with an electrometer (Keithley Instruments, Inc., model 616, serial number 49015A, Cleveland, OH) that was calibrated with a current source (Keithley Instruments, Inc., model 263, serial number 528322, Cleveland, OH) with a calibration traceable to the NIST.[41] For the FC measurements, the radiosurgery beamline included a Lucite block (to spread the beam laterally and to degrade the incident proton beam energy of 159 MeV down to 126 MeV, monitor chambers, and various circular collimating apertures. The value of the average proton mass stopping power in Eq. (6) at the FC measurement location was taken as 6.2 $\mathrm{MeV\,cm^2/g}$, corresponding to a mean proton beam energy of 125.6 MeV. For additional details, the reader may consult a recent paper by Newhauser *et al.*[36] that covers the HCL/FC methods for radiosurgery dosimetry. The FC methods and apparatus described in that paper were also used to calibrate the RET3 diode. Additional information on the HCL/FC dosimetry may be found elsewhere.[26,27,37–40] The RET3 diode was operated in the manner described by Koehler,[25] where the ionization charge collected is proportional to dose, provided the bias across the diode junction is held at or very near zero.[36] The ionization charge collected from the diode junction was measured with a commercial electrometer (Keithley Instruments, Inc., model 616, serial number 49015A, Cleveland, OH), located in the treatment room, and was corrected for the no-beam background signal. The electrometer's calibration coefficient was determined at HCL using a current source (Keithley Instruments, Inc., model 263, serial number 528322, Cleveland, OH) with a calibration traceable to the NIST.[41] An adjustable voltage source, located between the diode and the input stage of the electrometer, suppressed the input offset voltage, thereby minimizing the no-beam background current. The electrometer provided an analog signal (0–2 V) that is proportional to the charge reading and this signal was measured with a voltmeter located outside of the treatment room.

For all of the absorbed dose measurements, the transmission ion chamber readings were corrected to 22 °C and 101.3 kPa. However, we did not make corrections for the temperature dependence of the diode's response (cf. Koehler[25] and *errata*, available upon request from the Harvard Cyclotron Laboratory), since the temperature effect was neglected in the HCL/FC-based diode dosimetry method. This is consistent with our primary goal of comparing the ICRU/IC and HCL/FC dosimetry systems *as practiced*. (We did, however, observe a 0.55% increase in the diode's response per degree Celcius of temperature increase. This effect is discussed further in Sec. IV.)

The diode was contained in a one-dimensional scanning system. The device mounts to the snout, as shown in Fig. 6. It includes the diode, mounted on a pivoting plastic arm, which moves the diode along a gentle arc, thereby approximating a linear translation in depth along the beam central axis. The effective wall thickness of the diode was experimentally measured at 1.2 mm $\pm$0.2 mm water equivalent thickness (WET). The diode's arm is spring loaded in order to keep the diode in contact with the downstream face of a stepped Lucite wheel that serves as a phantom. The wheel is

TABLE II. Absorbed dose determinations in the ocular treatment beam of the Harvard Cyclotron Laboratory (HCL). The ratio of the absorbed dose per monitor unit determinations from a diode measurement, denoted by $D_{\mathrm{diode}}(z_{\mathrm{m}})$, to that from ionization chamber, $D_{\mathrm{IC}}(z_{\mathrm{m}})$, at the center of a spread-out Bragg peak (depth z_{m}), were obtained with the HCL/FC and ICRU/IC measurement techniques (see the text), respectively. Statistical measures of the absorbed dose per monitor unit and ratio values are given, including the average, experimental standard deviation (denoted by σ), and experimental standard deviation of the mean (denoted by σ_{μ}).

Date	$D_{\mathrm{IC}}(z_{\mathrm{m}})$ (cGy/MU)	$D_{\mathrm{diode}}(z_{\mathrm{m}})$ (cGy/MU)	$D_{\mathrm{diode}}(z_{\mathrm{m}})/D_{\mathrm{IC}}(z_{\mathrm{m}})$
15 September 1998	8.853	8.929	1.009
22 September 1998	8.801	8.885	1.010
29 September 1998	8.788	8.866	1.009
06 October 1998	8.762	8.803	1.005
20 October 1998	8.840	8.891	1.006
27 October 1998	8.799	8.928	1.015
03 November 1998	8.803	8.910	1.012
10 November 1998	8.839	8.844	1.001
17 November 1998	8.863	8.978	1.013
Average	8.821	8.874	1.006
σ	0.034	0.076	0.009
Percent σ	0.4	0.9	0.9
σ_{μ}	0.011	0.024	0.003
Percent σ_{μ}	0.12	0.27	0.29

motorized and may be rotated remotely. It has 18 steps, ranging in thickness from 0 to 35 mm WET. All absolute absorbed dose measurements in the reference beam were made at a water equivalent depth of 20 mm by positioning the variable thickness stepped wheel to intercept the beam with its 19 mm WET step. The alignment of the diode with the beam's central axis is routinely verified with light field that is collimated by a small diameter circular aperture. Because the diode junction is not visible due to protective covering (black electrical tape), its position was verified with diagnostic photon and proton radiographs.

III. RESULTS AND DISCUSSION

Table II summarizes a series of nine absorbed dose measurements that was carried out over a two-month period in 1998. For each measurement date, the absorbed dose per monitor unit at the reference depth, $D(z_{\mathrm{m}})$, from the ICRU/IC and HCL/FC techniques are tabulated. Figure 7 plots the values of $D(z_{\mathrm{m}})$ versus time and Fig. 8 plots the values of $D(z_{\mathrm{m}})/((D(z_{\mathrm{m}}))_{\mathrm{avg}}$ from the IC and from the diode versus time. The mean ratio of absorbed doses, $D_{\mathrm{diode}}(z_{\mathrm{m}})/D_{\mathrm{IC}}(z_{\mathrm{m}})$, is 1.006 with an experimental deviation of the mean (ESDOM) of 0.3%. The ionization chamber's experimental standard deviation (ESD), at 0.1%, is slightly better than the 0.3% value observed with the diode system.

It should be noted that the diode absorbed doses were reported in tissue while the corresponding ICRU/IC values were stated in water. Converting the HCL/FC dose determinations from tissue to water (using mass stopping powers from Janni[42]) would result in an increase of approximately 0.5% in the 20 to 150 MeV interval. At the ocular beam reference depth, this increases $D_{\mathrm{diode}}(z_{\mathrm{m}})/D_{\mathrm{IC}}(z_{\mathrm{m}})$ to 1.011.

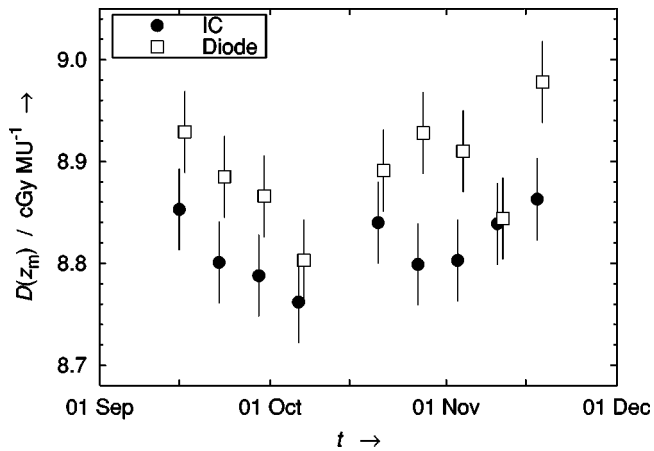

FIG. 7. The absorbed dose per monitor unit $D(z_{\mathrm{m}})$ measurements vs time. Separate series are plotted for diode and ionization chamber measurements. For clarity, the ion chamber and diode measurements have been offset from one another slightly in time. The error bars represent the estimated total uncertainties, approximately 4% for each dosimetry system.

The HCL/FC and ICRU/IC techniques agree within their respective uncertainties (discussed in Sec. IV), each estimated at 4% (one standard uncertainty). The difference is clinically insignificant. The ICRU/IC technique was adopted as the standard practice for ocular beam dosimetry in June, 1998, although we continued to run both systems in parallel beyond that date in order to obtain the data for this report.

The excellent agreement is perhaps surprising in light of the discrepancies between the IC and FC methods that were revealed in the HCL large-field beamline (cf. Refs. 18–20), where a change to the ionization-chamber-based standard resulted in a 6.5% increase in the reported absorbed dose per proton fluence.[22–24]

However, the present findings are consistent with a recent comparison of dosimetry methods in the HCL radiosurgery

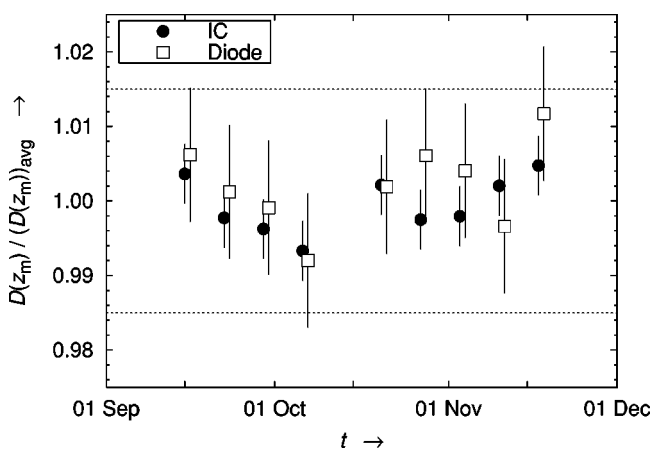

FIG. 8. The ratio of absorbed dose per monitor unit measurements to the average of all measurements in the series, $D(z_{\mathrm{m}})/((D(z_{\mathrm{m}}))_{\mathrm{avg}}$, as a function of time. Separate series are plotted for diode and ionization chamber measurements. This so-called *constancy* plot reveals that both systems exhibit excellent reproducibility. The dashed lines represent the tolerance band, i.e., the clinical intervention thresholds. For clarity, the ion chamber and diode measurements have been offset slightly in time. The error bars represent the experimental standard deviations given in Table II.

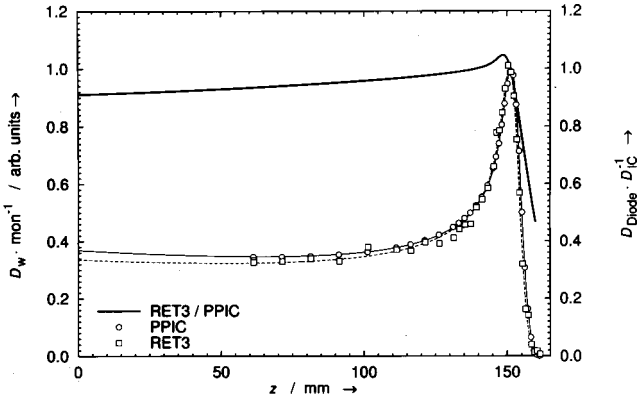

FIG. 9. Absorbed dose to water per monitor unit, D_w/mon, as a function of water depth, z, measured with the Si diode (RET3) and a parallel plate ionization chamber (PTW model 23343) in the 159 MeV radiosurgery proton beam at the Harvard Cyclotron Laboratory. The consecutively measured curves from the ion chamber (circles) and from the diode (squares) were fitted to an analytical Bragg curve model and normalized to unity at their respective peaks (abscissa at left). The solid line, representing the ratio of the normalized curves from the diode and ion chamber, or D_{diode}/D_{IC}, reveals decreasing agreement with decreasing water depth (abscissa at right).

beamline. Newhauser *et al.*[36] compared absorbed dose determinations from an ionization chamber (calibrated with the ^{60}Co air-kerma method) with those from another Si diode dosimeter (designated by MC459 and calibrated based on a Faraday cup technique). They found agreement in absorbed dose to water to within better than 2% near the peak of a 160 MeV pristine (unmodulated) Bragg curve, with decreasingly good agreement with decreasing water depth. They attributed the latter trend to the differing LET dependencies of the diode and ion chamber responses. At 60 mm water depth, corresponding to 120 MeV proton energy, they found that the FC-based result was 9% lower than was obtained with the IC. That finding confirms the 8.5% discrepancy in the FC dosimetry that was observed in a contemporary dosimetry intercomparison.[19] In a similar experiment, we observed that the RET3 diode's response was 7%±2% lower at 120 MeV that at the peak, as shown in Fig. 9. Figure 9 plots the relative response of the diode and the ionization chamber, as well as their ratio, revealing differences in the dosimeters' energy dependencies that are consistent with measurement reported by Newhauser *et al.*[36] The uncertainty in the ratio curve in Fig. 9 is estimated at less than 3% over the depth interval from 60 to 140 mm. (In the high-gradient regions on either side of the peak, the uncertainty is significantly higher due to the fact the observed modes of the measured Bragg curves differ by 0.5 mm. However, this effect is not important for the present purposes.) The above-mentioned observations suggest that a partial cancellation of competing systematic differences contributed to the high level of agreement near the end of range, e.g., at the reference depths of the ocular and radiosurgery beamlines. In particular, the FC calibrations of the ocular and radiosurgery diode dosimeters were carried out at 126 MeV, whereas the absorbed dose measurements were carried out at mean proton energies of less than 45 MeV in the ocular beam and less than 20 MeV in the radiosurgery beamline.

In terms of consistency with other institutions, the IC apparatus and methods yield measured absorbed dose values that are in excellent agreement with those from other proton therapy institutions worldwide. In 1998, MGH participated in an international dosimetry intercomparison conducted at the Loma Linda University Medical Center. The MGH absorbed dose determination deviated from the mean value from all participating institutions by only −0.8%.[43] Since the replacement of the HCL/FC technique with the ICRU/IC method did not result in clinically or physically significant numerical differences, we did not make any change to our statement of absorbed dose for the ocular beamline.

Finally, we note that the pediatric retinoblastoma patients treated at HCL were treated in the large-field beamline, not in the ocular beamline. The dosimetry of the large-field beamline is described elsewhere.[22–24]

IV. UNCERTAINTIES

The uncertainty in the ICRU/IC proton absorbed dose values is predominated by uncertainties in the value of $(W_{air})_p$. The International Atomic Energy Agency (IAEA) recently published recommendations on proton therapy dosimetry [IAE01], and, like the ICRU, advocated the use of a single value of $(W_{air})_p$. However, the IAEA's recommended value (34.23 J/C) is 1.6% lower than the ICRU value. Both institutions obtained their respective recommended values from evaluations of experimental data from the literature. The IAEA evaluation procedure was recently described by Mueller.[44] The evaluation procedures, the recommended values, and the corresponding uncertainties remain controversial.[36,45–47]

Both the ICRU and the IAEA estimate that their ionization chamber methods result in proton absorbed dose determinations with approximately 2% uncertainty. Newhauser and co-workers[36] at MGH recently demonstrated that various implementations of the ICRU's recommendations for the ^{60}Co calibration method for ion chambers yield proton absorbed dose determinations that differ by a maximum of 3.7%. While these methods agree within the stated uncertainties, the discrepancy is much larger than the measuring systems' precision. Their findings illustrate the potential paths for introducing undesirable systematic errors, viz. inconsistencies with other proton therapy centers. The MGH study, which includes a detailed discussion on uncertainties, concluded that their reference absorbed dose measurements are accurate to within approximately 4% (one standard uncertainty).

Conceptual errors in the ICRU formalisms were pointed out by Medin *et al.*[45] Two of these are relevant to the present work and are described in the following. First, a correction factor for humidity, K_{hum}, appears in Eq. (4) of the air-kerma formalism. Removing this extraneous term would decrease the apparent proton absorbed dose by 0.3%. Second, the ICRU formalism does not explicitly include ionization-chamber-specific perturbation correction factors. The IAEA

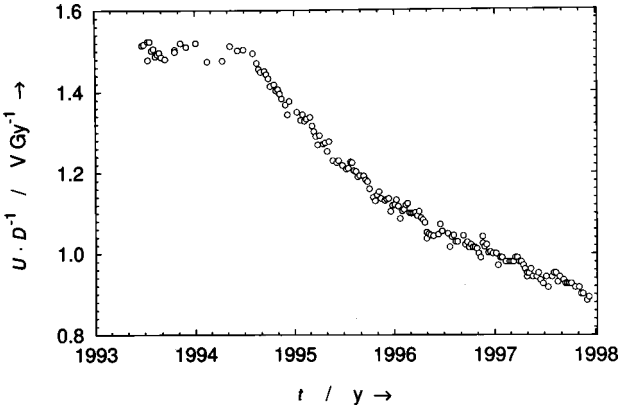

FIG. 10. The relative sensitivity, U/D, of the RET3 diode vs time, revealing the decrease over time. The sensitivity decreases due to accumulated radiation-induced damage to the semiconductor junction.

(2001) recommends that all perturbation factors for proton beams should be taken as unity, so their omission introduces no systematic error. On the basis of the following considerations, we chose not to adopt corrections to the conceptual errors in the ICRU protocol in order to maintain consistency with the proton dosimetry intercomparison by Vatnitsky *et al.* (1999), to maintain consistency with our clinical practice since 1998 (the corrections were published by Medin *et al.* in 2000), and since the corrections would be numerically small and clinically insignificant. The uncertainty in the absorbed dose from the HCL Faraday cup methods was studied by Verhey *et al.*[27] and by Petti,[37] as were various correction factors for the HCL/FC system. Corrections to Faraday cup response may be required for contaminating particles in the proton beam (i.e., low-energy protons, spallation products, and electrons) and electron suppression inefficiency (cf. Ref. 30, and references therein). Newhauser *et al.*[36] estimated the uncertainty in the HCL/FC method at approximately 4% based on the findings from Verhey *et al.* and from Petti. While investigators elsewhere have studied FC technique suitable for proton therapy dosimetry (cf. Refs. 48–50), the influence of contaminating low-energy protons is highly dependent on the details of the nozzle configuration. Therefore, it is difficult to apply their findings to the HCL apparatus in a quantitative manner.

The accumulated radiation damage to the diode junction reduces it sensitivity, as shown in Fig. 10 as a function of time. Additional uncertainties may result if the irradiation amount induces a significant change in sensitivity. In this work, the accumulated damage in any single session was negligibly small. The diode's response also depends on temperature.[25] A one degree increase in temperature causes a 0.6% increase in response. While this temperature correction was not taken into account in this work (for reasons stated earlier) the achievable precision of the diode dosimeter is probably better than was observed here.

V. CONCLUSIONS

A comparison of diode and ionization chamber dosimetry systems for ocular proton radiation therapy reveals that they agree within the respective uncertainties. A diode dosimeter (calibrated with the HCL Faraday cup technique), yields an absorbed dose to water that is 1.1% (0.3% experimental standard deviation of the mean) higher than that obtained with an ionization chamber (calibrated based on the ^{60}Co air-kerma calibration and according to the recommendations contained in ICRU Report 59). This difference is small compared to the measurement systems' respective uncertainties, which are both 4%. The ionization-chamber technique exhibited slightly better reproducibility and repeatability than was observed with the diode/FC system and it was adopted as our standard clinical practice at HCL in June of 1998. In April, 2002, the entire ocular treatment apparatus was moved from HCL to the Northeast Proton Therapy Center (NPTC). The dosimetry methods implemented at HCL were adopted as the standard clinical practice for the NPTC, ensuring consistency between the two facilities and providing continuity in our clinical operation.

ACKNOWLEDGMENTS

We would like to thank the cyclotron operators for providing valuable assistance. In particular, Deirdre Foley, Jeff Bellerose, Ethan Cascio, and Jim Vlahakis deserve special mention. We also express gratitude to Andy Koehler, Miles Wagner, John Micka, John Spokas, Uwe Titt, Stephen Hummel, and Marc Bussiere for helpful discussions.

[a]Electronic mail: wnewhaus@mdanderson.org
[b]Present address: Spire Corporation, 1 Patriots Park, Bedford, MA 01730.

[1] H. B. Stallard, "Malignant melanoblastoma of the choriod," Mod. Probl. Ophthalmol. **7**, 16–38 (1966).
[2] J. L. Hungerford, A. J. E. Foss, I. Whelahan, R. D. Errington, A. Kacperek, and J. Kongerud, "Side effects of photon and proton radiotherapy for ocular melanoma," in *Radiotherapy of Ocular Disease. Frontiers in Radiation Therapy and Oncology*, edited by T. Wiegel, N. Bornfeld, M. H. Foerster, and W. Hinkelbein (Karger, Basil, 1997), pp. 287–293.
[3] E. S. Gragoudas, A. M. Lane, S. Regan, W. Li, H. E. Judge, J. E. Munzenrider, J. M. Seddon, and K. M. Egan, "A randomized controlled trial of varying radiation doses in the treatment of choroidal melanoma," Arch. Ophthalmol. (Chicago) **118**, 773–778 (2000).
[4] J. E. Munzenrider, "Uveal melanomas: Conservation treatment," Hematol. Oncol. Clin. North Am. **15**, 389–402 (2001).
[5] M. Fuss, L. N. Loredo, P. A. Blancharski, R. I. Grove, and J. D. Slater, "Proton radiation therapy for medium and large choroidal melanoma: Preservation of the eye and its functionality," Int. J. Radiat. Oncol., Biol., Phys. **49**, 1053–1059 (2001).
[6] I. J. Constable and A. M. Koehler, "Experimental ocular irradiation with accelerated protons," Invest. Ophthalmol. **13**, 280–287 (1974).
[7] E. S. Gragoudas, M. Goitein, L. Verhey, J. Munzenrider, H. Suit, and A. Koehler, "Proton beam irradiation: An alternative to enucleation for intraocular melanomas," Ophthalmology (Philadelphia) **87**, 571–581 (1980).
[8] J. E. Munzenrider, L. J. Verhey, E. S. Gragoudas, J. M. Seddon, M. Urie, R. Gentry, S. Birnbaum, D. Ruotolo, C. Crowell, P. McManus, S. Finn, J. Sisterson, K. Johnson, K. Egan, D. Lento, and P. Bassin, "Conservative treatment of uveal melanoma: Local recurrence after proton beam therapy," Int. J. Radiat. Oncol., Biol., Phys. **17**, 493–498 (1989).
[9] E. S. Gragoudas, K. M. Egan, S. M. Walsh, S. Regan, J. E. Munzenrider, and V. Taratuta, "Lens changes after proton beam irradiation for uveal melanoma," Am. J. Opthalmol. **119**, 157–164 (1995).
[10] D. H. Char, W. Saunders, J. R. Castro, J. M. Quivey, A. R. Irvine, R. D. Stone, J. B. Crawford, M. Barricks, L. I. Lonn, G. F. Hilton, A. Schwartz, G. T. Y. Chen, J. T. Lyman, M. Collier, H. Sulit, B. Straatsma, and A. Kaminski, "Helium ion therapy for choroidal melanoma," Ophthalmology (Philadelphia) **90**, 1219–1225 (1983).

[11] M. W. Wilson, J. L. Hungerford, and D. Fuller, ''Comparison of episcleral plaque and proton beam radiation therapy for the treatment of choroidal melanoma,'' Ophthalmology (Philadelphia) **106**, 1579–1587 (1999).

[12] H. D. Suit, M. Krengli, and J. E. Munzenrider, ''Clinical experience with proton beam therapy at MGH/HCL: Proton Radiation Oncology Group trials,'' in *Advances in Hadrontherapy, Proceedings of the International Week on Hadrontherapy, Archamps, France, 20–24 November 1995*, edited by U. Amaldi, B. Larsson, and Y. Lemoigne (Elsevier, Amsterdam, 1997), pp. 103–110.

[13] L. T. Yonemoto, J. D. Slater, E. J. Friedrichsen, L. N. Loredo, J. Ing, J. O. Archambeau, S. Teichman, M. F. Moyers, P. A. Blacharski, and J. M. Slater, ''Phase I/II study of proton beam irradiation for the treatment of subfoveal choroidal neovascularization in age-related macular degeneration: Treatment techniques and preliminary results,'' Int. J. Radiat. Oncol., Biol., Phys. **36**, 867–871 (1996).

[14] J. O. Archambeau, X. W. Mao, L. T. Yonemoto, J. D. Slater, E. Friedrichsen, S. Teichman, W. Preston, and J. M. Slater, ''What is the role of radiation in the treatment of subfoveal membranes: Review of radiobiologic, pathologic, and other considerations to initiate a multimodality discussion,'' Int. J. Radiat. Oncol., Biol., Phys. **40**, 1125–1136 (1998).

[15] J. A. Adams, K. L. Paiva, J. E. Munzenrider, J. W. Miller, and E. S. Gragoudas, ''Proton beam therapy for age-related macular degeneration: Development of a standard plan,'' Med. Dosim **24**, 233–238 (1999).

[16] M. F. Moyers, R. A. Galindo, L. T. Yonemoto, L. Loredo, E. J. Friedrichsen, M. A. Kirby, J. D. Slater, and J. M. Slater, ''Treatment of macular degeneration with proton beams,'' Med. Phys. **26**, 777–782 (1999).

[17] J. M. Sisterson, ''Ion beam therapy: Overview of the world experience,'' in *Proceedings of the 16th International Conference on Accelerators in Research Physics*, edited by J. L. Duggan and I. L. Morgan, (American Institute of Physics, New York, 2001), pp. 865–868.

[18] A. Smith, R. Hilco, J. Dicello, P. Fessenden, M. Henkelman, K. Hogstrom, G. Lam, J. Lyman, H. Blattman, M. Salsmann, D. Reading, and L. Verhey, ''Dosimetry intercomparison between heavy charged particle radiotherapy facilities,'' *Pion and Heavy Particle Radiotherapy: Pre-Clinical and Clinical Studies*, edited by L. Skarsgard, 1982, pp. 49–60.

[19] S. Vatnitsky, J. Siebers, D. Miller, M. Moyers, M. Schaefer, D. Jones, S. Vynckier, Y. Hayakawa, S. Delacroix, U. Isacsson, J. Medin, A. Kacperek, A. Lomax, A. Coray, H. Kluge, J. Heese, L. Verhey, I. Daftari, K. Gall, G. Lam, T. Beck, and G. Hartmann, ''Proton dosimetry intercomparison,'' Radiother. Oncol. **41**, 169–177 (1996).

[20] S. Delacroix, A. Bridier, A. Mazal, J. Daures, A. Ostrowsky, C. Nauraye, A. Kacperek, S. Vynkier, N. Brassard, and J.-L. Habrand, ''Proton dosimetry comparison involving ionometry and calorimetry,'' Int. J. Radiat. Oncol., Biol., Phys. **37**, 711–718 (1997).

[21] W. Newhauser, A. Smith, J. Burns, K. Gall, C. Mayo, S. Rosenthal, and M. Wagner, ''A report on the change in the proton absorbed dose measurement protocol for the clinical trials conducted at the Harvard Cyclotron Laboratory,'' Med. Phys. **25**, A144–A145 (1998).

[22] W. D. Newhauser, A. R. Smith, J. Beatty, and J. A. Micka, ''Proton beam dosimetry. I. Determination of air-filled ionization chamber calibration coefficients in ^{60}Co radiation,'' Northeast Proton Therapy Center Report No. NPTC-HD-101, 28 August 2000.

[23] W. D. Newhauser and A. R. Smith, ''Proton beam dosimetry. II. Calculation of $(D/Q)/(N_x A_{\mathrm{ion}})$ values for air-filled ionization chambers at 100-MeV proton beam energy,'' Northeast Proton Therapy Center Report No. NPTC-HD-105, 18 September 2000.

[24] W. D. Newhauser and A. R. Smith, ''Proton beam dosimetry. III. Comparison of absorbed dose determinations in the large-field beam of the Harvard Cyclotron Laboratory based on Faraday cup and ionization chamber methods,'' Northeast Proton Therapy Center Report No. NPTC-HD-108, 22 December 2000.

[25] A. M. Koehler, ''Dosimetry of proton beams using small silicon diodes,'' Radiat. Res., Suppl. **7**, 53–63 (1967).

[26] W. M. Preston and A. M. Koehler, ''Proton beam dosimetry,'' Harvard University, Department of Physics Internal Report, Cambridge, December 1965.

[27] L. J. Verhey, A. M. Koehler, J. C. McDonald, M. Goitein, I.-Chang Ma, R. J. Schneider, and M. Wagner, ''The determination of absorbed dose in a proton beam for purposes of charged-particle radiation therapy,'' Radiat. Res. **79**, 35–54 (1979).

[28] J. T. Lyman, M. Awschalom, P. Berardo, H. Bichsel, G. T. Y. Chen, J. Dicello, P. Fessenden, M. Goitein, G. Lam, J. C. McDonald, A. R. Smith, R. T. Haken, L. Verhey, and S. Zink, ''Protocol for heavy charged particle therapy beam dosimetry,'' Report No. 16, American Association of Physicists in Medicine, American Institute of Physics, New York, 1986.

[29] S. Vynckier, D. E. Bonnett, and D. L. T. Jones, ''Code of practice for clinical proton dosimetry,'' Radiother. Oncol. **20**, 53–63 (1991).

[30] ''Clinical proton dosimetry. I. Beam production, beam delivery, and measurement of absorbed dose,'' ICRU Report No. 59, International Commission on Radiation and Units, Bethesda, 1998.

[31] International Atomic Energy Agency, ''Absorbed dose determination in external beam radiotherapy: An international code of practice for dosimetry based on standards of absorbed dose to water, '' Technical Report Series No. 398, IAEA, Vienna, 2001.

[32] X. Yan, U. Titt, A. M. Koehler, and W. D. Newhauser, ''Measurement of neutron dose equivalent to proton therapy patients outside of the proton radiation field,'' Nucl. Instrum. Methods (in press).

[33] Ionization chamber calibration report No. EQC0025 (Exradin Model T1, serial No. 233), University of Wisconsin–Madison, Accredited Dosimetry Calibration Laboratory, 6 March 1998.

[34] M. Boutillion, ''Comite Consultatif des les Etalons de Mesure des Rayonnements Ionisants, Offilib. Values of *g* for photon energies,'' 85-18, Bureau International des Poids et Mesures, Sevres, 1987.

[35] J. B. Smathers, V. A. Otto, A. R. Smith, P. R. Almond, F. H. Attix, J. J. Spokas, W. M. Quam, and L. J. Goodman, ''Composition of A-150 tissue equivalent plastic,'' Med. Phys. **4**, 74–77 (1975).

[36] W. D. Newhauser, K. D. Myers, S. Rosenthal, and A. R. Smith, ''Proton beam dosimetry. IV. Absorbed dose determinations in the radiosurgery beam of the Harvard Cyclotron Laboratory based on ionization chamber measurements and ICRU Report 59,'' Northeast Proton Therapy Center Report No. NPTC-HD-111, 9 April 2001. [A shortened version of this report appears in Phys. Med. Biol. **47**, 1369–1389 (2002)].

[37] P. L. Petti, ''A measurement of *w*, the energy required to create an ion pair, for 150 MeV protons in nitrogen and argon, '' Ph.D. thesis, Harvard University, Cambridge, 1985.

[38] C. Mayo, ''Faraday cup dosimetry at the Harvard Cyclotron Laboratory,'' Harvard Cyclotron Laboratory internal report, Cambridge (undated).

[39] C. Mayo, J. M. Sisterson, M. Wagner, B. Gottschalk, and A. M. Koehler, ''Faraday cup dosimetry in proton beam therapy,'' Med. Phys. **18**, 625 (abstract) (1991).

[40] C. Mayo, ''Summary of calibration parameters,'' Internal Report, Harvard Cyclotron Laboratory, Cambridge, 6 April 1993.

[41] A. M. Koehler (private communication).

[42] J. F. Janni, ''Proton range-energy tables. I, II,'' At. Data Nucl. Data Tables **27**, 147–529 (1982).

[43] S. Vatnitsky, M. Moyers, D. Miller, G. Abell, E. Pedroni, A. Coray, A. Mazal, W. Newhauser, O. Jaekel, J. Heese, A. Fukumura, Y. Futami, L. Verhey, I. Daftari, E. Grusell, A. Molokanov, and C. Bloch, ''Proton dosimetry intercomparison based on the ICRU 59 protocol,'' Radiother. Oncol. **51**, 273–279 (1999).

[44] J. W. Mueller, ''Weighted medians,'' Bureau International des Poids et Mesures, BIPM Report No. 2000/6, Sevres, 2000.

[45] J. Medin, P. Andreo, and S. Vynckier, ''Comparison of dosimetry recommendations for clinical proton beams,'' Phys. Med. Biol. **45**, 3195–211 (2000).

[46] L. J. Verhey, ''Response to 'Comparison of dosimetry recommendations for clinical proton beams,' '' Phys. Med. Biol. **45**, L51–L52 (2000).

[47] P. Andreo, J. Medin, and S. Vynckier, ''Reply to the comments of L. J. Verhey on 'Comparison of dosimetry recommendations for clinical proton beams,' '' Phys. Med. Biol. **45**, L52–L54 (2000).

[48] E. Grusell, U. Isacsson, A. Montelius, and J. Medin, ''Faraday cup dosimetry in a proton therapy beam without collimation,'' Phys. Med. Biol. **40**, 18 31–1840 (1995).

[49] J. F. Ziegler, P. A. Saunders, and T. H. Zabel, ''Portable Faraday cup for nonvacuum proton beams,'' IBM J. Res. Dev. **40**, 73–76 (1996).

[50] R. Cambria, J. Herault, N. Brassart, M. Silari, and P. Chauvel, ''Proton beam dosimetry: A comparison between the Faraday cup and an ionization chamber,'' Phys. Med. Biol. **42**, 1185–1196 (1997).

[51] J. Medin and P. Andreo, ''Monte Carlo calculated stopping-power ratios, water/air, for clinical proton dosimetry (50–250 MeV),'' Phys. Med. Biol. **42**, 89–105 (1997).

[52] Thimble ionization chamber model T1 specifications and usage instructions. Exradin Inc., Lisle, IL, 2000.